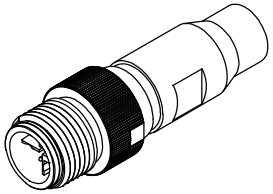

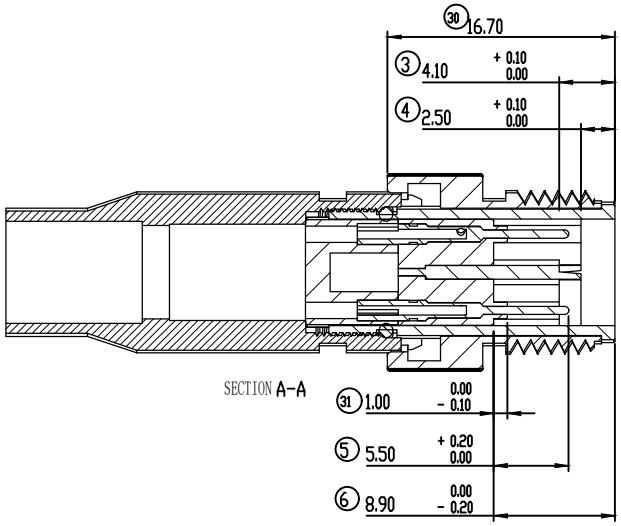

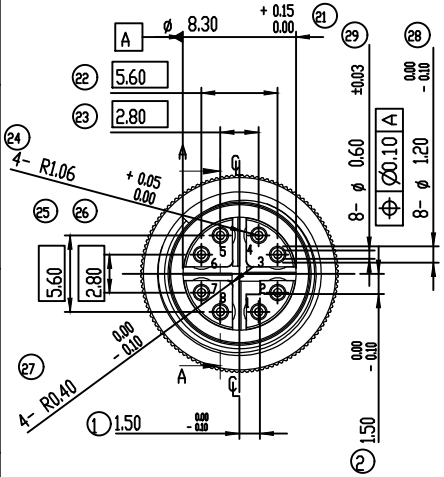

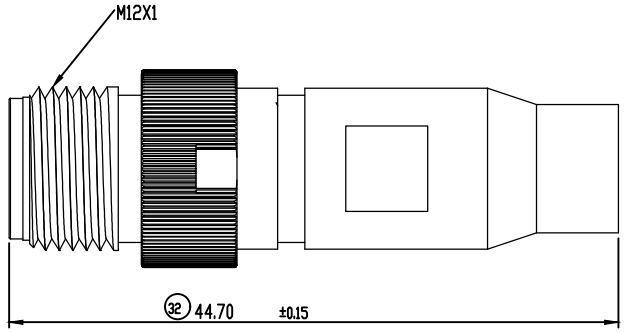

SPECIFICATION
MATERIAL
Insulator: Thermosetting polymer
Contacts: Brass
Shell: Brass & Zinc alloy
CONTACT PLATING
Underplate: 50u"~200u" Nickel
Contact area: 30u" Selective gold
ELECTRICAL
Operation voltage: 48 V AC(RMS)
Current rating: 0.5 Amps max.
Contact resistance: 5 mohms MAX.
Insulation resistance: 100 Mohms min @ 500 VDC
Dielectric withstanding voltage: 500 VAC / minute
Temperature range: -40°C TO +70°C
Mating cycles: 500 insertions

Part no.

WEP X 08 M D D D1 N E D 3 FG
1 2 3 4 5 6 7 8 9 10 11 12

1.SERIES NO.
WEP=Water proof Conn.
2.A=Solder type
K=Crimp Type
3.CONTACT NUMBER:
08=8 PINS
4.CONTACT TYPE:
M=MALE
5.CONTACT AREA PLATING:
D=30u" GOLD
6.SOLDER TAILS AREA PLATING:
D=30u" GOLD
7.APPLY TYPE:
D1=Solder 180°
8.SHELL PLATING:
N=Nickel
9.E=X Coding 24AWG.
10.PACKING STYLE:
D=BAG
11.INSULATOR COLOR:
3=Black
12.GREEN OPTION:
E=RoHS (Bright)

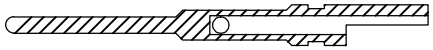

B Solder pin

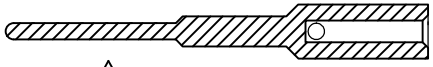

B Crimp pin

APTOS Technology CONFIDENTIAL
This document, and all information it contains, are the confidential, propriatary property of APTOS Technology. Disclosure, duplication or distribution of this document, or any information it contains, in whole or part, without prior written permission from APTOS Technology is strictly prohibited

UNLESS OTHERWISE SPECIFIED TOLERANCE

ANG.	± 2°
0.	± 0.30
.0	± 0.20
.00	± 0.10

APTOS TECHNOLOGY

SCALE: AS SHOWN	UNIT: mm		
DRAWN JG	01/02/2018	DRAWING NAME:	M12 X-Code Plug
CHECKED	/ /		
APPROVED	/ /	PRODUCT NO.	WEP-X08MDDD1NED3-FG
SIZE A4	REV. B	FILE NAME:	WEP-X08MDDD1NED3-FG.dwg

REV.	DESCRIPTION	DATE